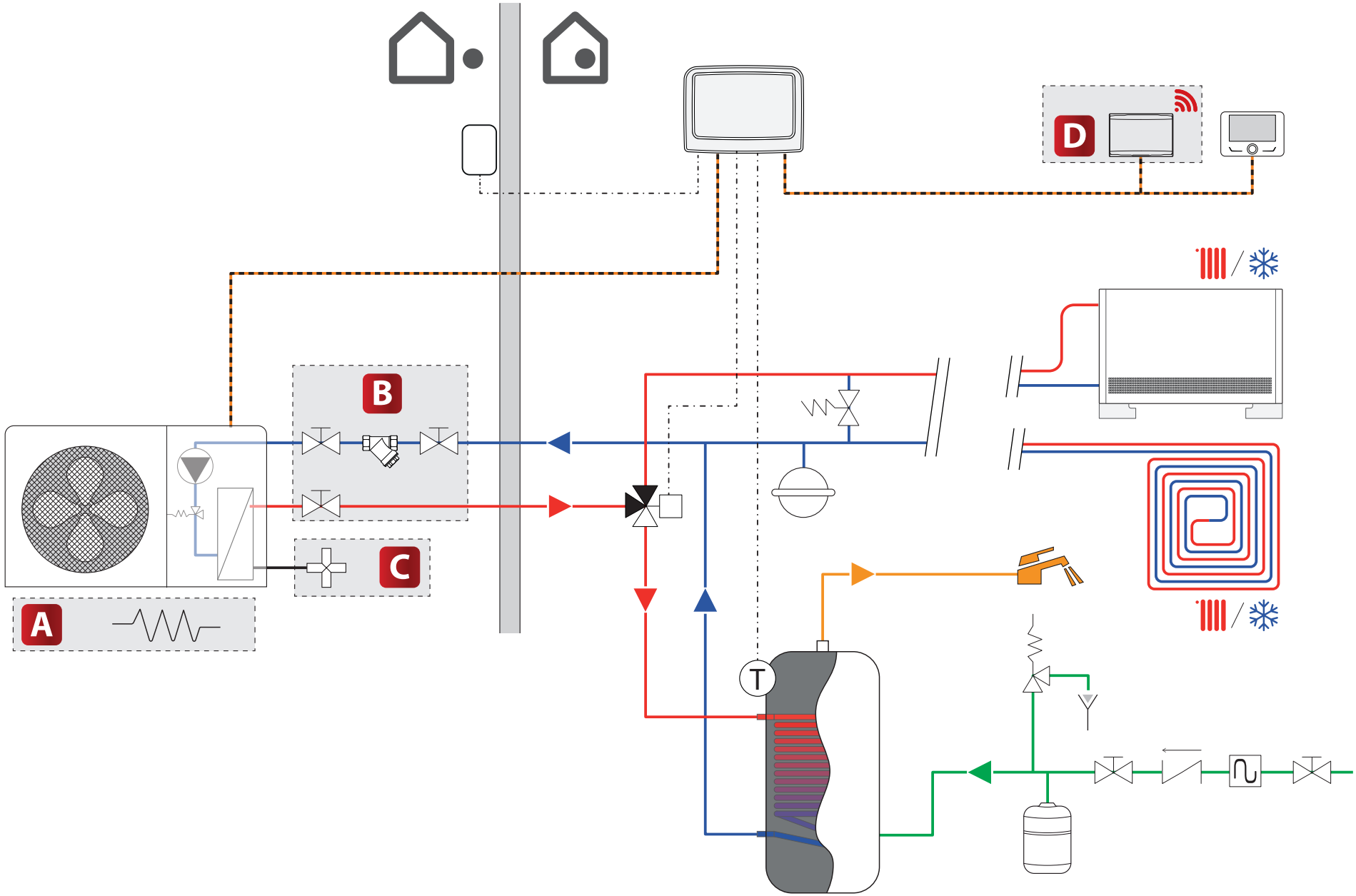

SCHEME NAME

Schema - LB MONO One Zone + DHW

CLASSIFICATION

Generation system

DATE	REV.	SCHEME	PAGE
03/2022	1	Hydraulic	1/1

elco ATAG

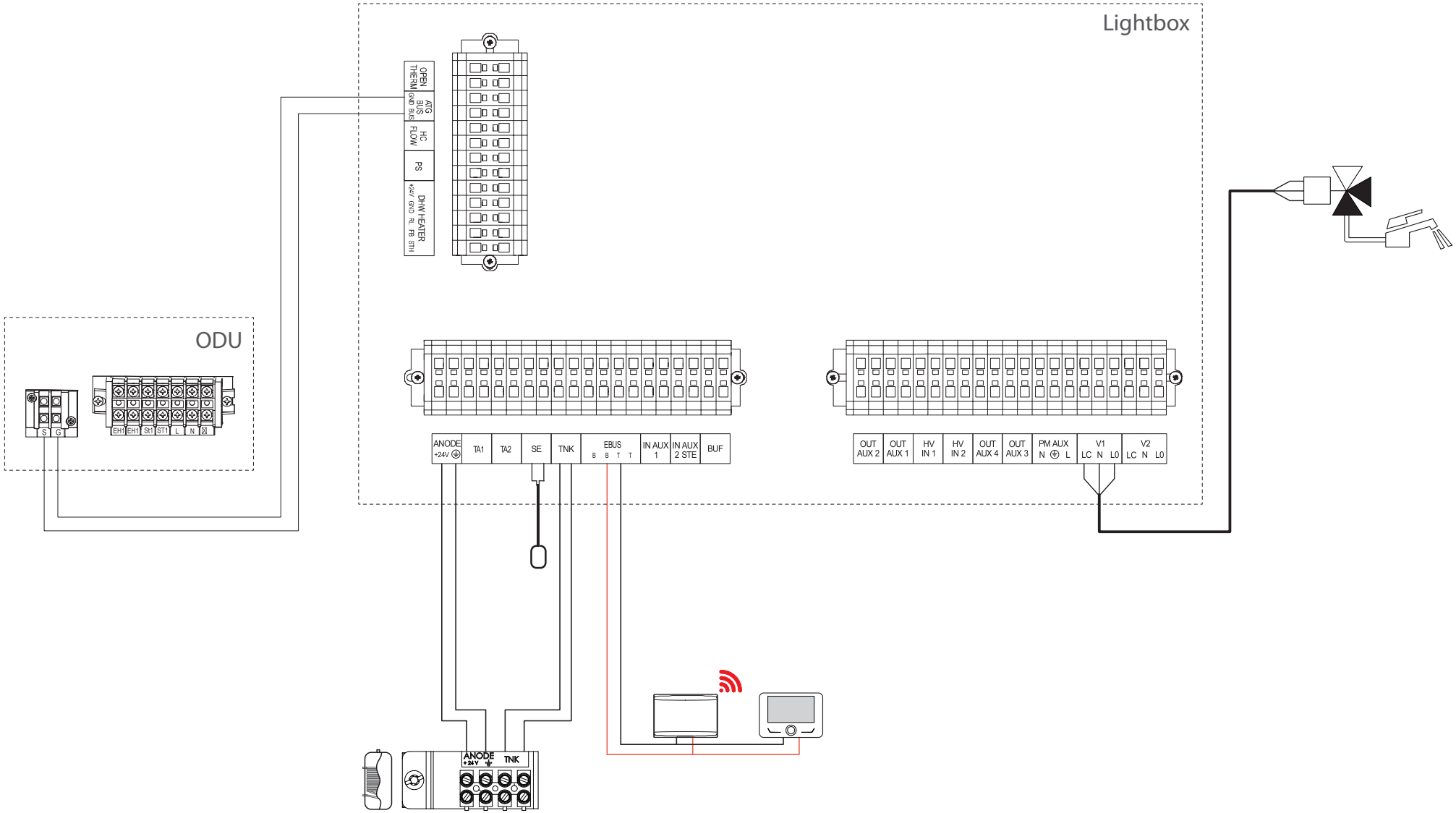

SCHEME NAME			
Schema - LB MONO One Zone + DHW			
CLASSIFICATION Generation system			
DATE 03/2022	REV. 1	SCHEME Electonic	PAGE 1/1

elco ATAG